800 Series

# INDICATING TEMPERATURE CONTROLS AND THERMOMETERS

## FEATURES

- Temperature Indication and Control
- Single or Dual SPDT Output
- Stainless Steel Bulb and Capillary
- ± 1% Repeatability
- Enclosure Type 1, 4, and Explosion Proof Versions
- Temperature Ranges:
  -180 to 650°F
  (-117.8 to 343.3°C)

## OVERVIEW

For applications that require a visual display of process temperature and set point, the 800 Series offers a highly readable four inch setting/indication scale. It is available in two versions: a Lexan® enclosure for enclosure type 1 or 4 applications (with option M300), and with Lexan® and epoxy-coated aluminum enclosure for Div. 1 explosion-proof applications. For temperature indication only, the T800 thermometer incorporates the same performance and construction features of the 800 Series.

800 Series models control and indicate the temperature of food service appliances, ovens, packaging machines, HVAC equipment, and various temperature applications within process plants.

Dual set point version

Explosion proof version

## FEATURES

- Temperature indication and control switching
- Single or dual SPDT output
- Stainless steel bulb & capillary
- Simple to adjust via external knob
- Explosion proof models are UL listed, cUL certified, and ATEX compliant. Russian, Ukrainian, Chinese, and Australian flameproof and/or intrinsic safety compliance are optional
- Optional thermowells and union connectors available

Lexan® is a registered trademark of General Electric Co.

# SPECIFICATIONS

| | |
|---|---|
| **STORAGE TEMPERATURE** | -65 to 160°F (-54 to 71°C) |
| **AMBIENT TEMPERATURE LIMITS** | -40 to 160°F (-40 to 71°C); set point typically shifts less than 1% of range for a 50°F (28°C) ambient temperature change |
| **SET POINT REPEATABILITY** | ± 1% of adjustable range |
| **SHOCK** | Set point repeats after 15 G, 10 millisecond duration |
| **VIBRATION** | Set point repeats after 2.5 G, 5-500 Hz |
| **ENCLOSURE** | Types 800, 802: Lexan® black finish; clear Lexan® faceplate<br>Types T800, 820E, 822E: Die cast aluminum, epoxy coated enclosure, gasketed; Lexan® cover and faceplate |
| **ENCLOSURE CLASSIFICATION** | Types 800, 802, T800: Designed to meet enclosure type 1 requirements (enclosure type 4 by specifying option M300). Types 820E, 822E: Designed to meet enclosure type 4X; Class I Div. 1 products meet enclosure type 7; Class II, Div. 1 products meet enclosure type 9. Certified to IP66 requirements |
| **INDICATION ACCURACY** | ± 1% of adjustable range |
| **SWITCH OUTPUT** | One or two SPDT; dual switch may be separated up to 100% of range; except type 822E where switch #2 can be set up to 25% of range span below switch #1 set point. Switches may be wired "normally open" or "normally closed" |
| **DUAL SWITCH ADJUSTMENT** | Type 802: Dual switch controls have separate knob & temperature pointers for each switch set point (standard); turn inner green knob for setting #1 switch; outer black knob for switch #2.<br>Type 822 common adjustment single knob and pointer for set point |
| **ELECTRICAL RATING** | 15 A 125/250/480 VAC resistive. Electrical switches have limited DC capabilities. Consult factory for additional information. |
| **WEIGHT** | Types 800, 802, T800: Approx. 3 lbs., 4 oz. (1,47 kg)<br>Types 820E, 822E: Approx. 7 lbs (3,18 kg) |
| **ELECTRICAL CONNECTION** | Types 800, 802: 7/8" diameter knockout on left hand side; 18 AWG color-coded leadwires, approx. 9 inches exposed with strain relief (option M100 adds terminal block wiring).<br>Types 820E, 822E: two 3/4" NPT E/C with terminal block |
| **BULB AND CAPILLARY** | 6 feet 304 stainless steel |
| **TEMPERATURE FILL** | Model 1BS: solvent filled; models 2-8: non-toxic oil filled |
| **TEMPERATURE DEADBAND** | Typically 1% of range under laboratory conditions (70°F ambient circulating bath at rate of 1/2°F per minute change) |

# APPROVALS

**UNITED STATES AND CANADA**
**800 & 802 Models**
**UL Listed, CSA Certified**
UL 873, file # E10667; CSA C22.2 No. 24, file # LR7814

**820E & 822E Models**
Class I, Division 1 and 2, Groups B, C & D
Class II, Division 1 and 2, Groups E, F & G
Class III
Class I, Zone 1, Group IIB + $H_2$ T6
Enclosure Type 4X
**UL Listed, cUL Certified**
UL 50 & 698; CSA No. 25 & 30 - file # E43374

**EUROPE**
**820E & 822E Models**
**ATEX Directive (94/9/EC)**
II 2 G EEx d IIC T6
II 2 D T+85°C
Tamb = -40°C to +71°C
IP 66
UL International DEMKO A/S (N.B.# 0539)
Certificate # DEMKO 03 ATEX 0305048
EN 50014, 50018, 50281 & 60529

**Low Voltage Directive (LVD) (73/23/EC & 93/68/EEC)**
UEC compliant to LVD
Products rated lower than 50 VAC and 75 VDC
are outside of the scope of the LVD
The Low Voltage Directive does not apply to products
for use in hazardous locations

**RUSSIA**
**820E & 822E Models**
Gosgortechnadzor Permit **(OPTIONAL – code M406)**
1ExdIICT6X
Tamb = -40°C to +71°C
NANIO CCVE Certification Center
Certificate # RRS 04-8895
GOST 12.2.007.0, GOST R 51330.0 & 51330.1

**UKRAINE**
**820E & 822E Models**
Gosnadzorohrantruda Permit **(OPTIONAL - code M404)**
1ExdIICT6X
Tamb = -40°C to +71°C
Certificate # 1867.04.30 - 31.62.4

**CHINA**
**820E & 822E Models**
CQST Certified **(OPTIONAL - code M408)**
ExdIICT6
DIP A21 $T_A$ +85°C
Tamb = -40°C to +75°C
GB 3836.1, 3836.2 & 12476.1
Certificate # CNEx 04.301X

**GLOBAL APPROVAL (INCLUDES AUSTRALIA)**
See www.iecex.com.countries for a list of participating member countries
**820E & 822E Models**
IECEx Certified **(OPTIONAL - code M403)**
Ex d IIC T6
Tamb = -40°C to +75°C
IEC 60079-0, 60079-1
Certificate # IECEx UL 03.0001

# TEMPERATURE MODEL CHART

| Model | Adjustable Set Point Range | | Max. Temp. | | Scale Div. | | Bulb Size |
|---|---|---|---|---|---|---|---|
| | °F | °C | °F | °C | °F | °C | OD x Length |
| 1BS* | -180 to 120 | -117.8 to 48.9 | 170 | 76.7 | 5 | 5 | 3/8 x 3-3/4"" |
| 2BS | -125 to 350 | -87.2 to 176.7 | 400 | 204.4 | 10 | 5 | 3/8 x 2-7/16" |
| 3BS | -125 to 500 | -87.2 to 260 | 550 | 287.8 | 10 | 5 | 3/8 x 2-1/8" |
| 4BS | -40 to 120 | -40 to 48.9 | 170 | 76.7 | 5 | 2 | 3/8 x 6-3/4" |
| 5BS | -40 to 180 | -40 to 82.2 | 230 | 110 | 5 | 2 | 3/8 x 5" |
| 6BS | 0 to 250 | -17.8 to 121.1 | 300 | 148.9 | 5 | 2 | 3/8 x 4-1/2" |
| 7BS | 0 to 400 | -17.8 to 204.4 | 450 | 232.2 | 10 | 5 | 3/8 x 3" |
| 8BS | 50 to 650 | 10 to 343.3 | 700 | 371.1 | 10 | 10 | 3/8 x 3-1/4" |

Standard capillary length is 6 ft., optional capillary lengths and protection are available, consult UE.
*NOT AVAILABLE TYPE T800

# HOW TO ORDER

## BUILDING A PART NUMBER

Select a **Type**

Refer to the "Type" section below.

Determine type number based on switch output, enclosure, adjustment and reference.

Fill in the type portion of your part number with the corresponding number.

Select a **Model**

Refer to the "Model Charts."

Determine model based on adjustable range, deadband and proof pressure.

Fill in the model portion of your part number with the corresponding number.

Select an **Option**

Refer to the "Options" section.

Determine option number based on switch output, optional materials or other product enhancements.

Fill in the option portion of your part number with the corresponding number.

Leave "option" portion blank if no options are needed. FOR MULTIPLE OPTIONS: Call United Electric Controls.

| TYPE | TEMPERATURE |
|---|---|
| | Type 800 - Bulb and capillary; one SPDT output; external indication |
| | Type 802 - Bulb and capillary; two SPDT outputs; external indication |
| | Type 820E - Bulb and capillary; one SPDT output; external indication, explosion proof |
| | Type 822E - Bulb and capillary; two SPDT outputs; external indication, explosion proof |
| | Type T800 - Thermometer only with external indication |

**OPTIONS**

| SWITCH OPTIONS* | DESCRIPTION |
|---|---|
| 0140 | Gold contacts, 1 A 125 VAC resistive. NOT AVAILABLE TYPE 800, 820E, T800 |
| 0500 | Close deadband, 5 A 125/250 VAC resistive. NOT AVAILABLE TYPE T800 |
| 2000 | 20 A 125/250 VAC resistive. NOT AVAILABLE TYPE T800 |

**OTHER OPTIONS**

| | |
|---|---|
| M007 | Drilled 7/8" electrical opening on right side. NOT AVAILABLE TYPES 820E, 822E and T800 |
| M100 | Terminal block wiring. NOT AVAILABLE TYPE 820E, 822E (standard) AND T800 |
| M201 | Factory set one switch; specify increasing or decreasing temperature and set point. NOT AVAILABLE TYPE 802, 822E, T800 |
| M202 | Factory set two switches; specify increasing or decreasing temperature and set point. NOT AVAILABLE TYPE 800, 820E, T800 |
| M300 | NEMA 4 construction; includes watertight conduit fitting and gasketing. NOT AVAILABLE TYPES 820E, 822E |
| M320 | Tamper resistant cover. NOT AVAILABLE TYPES T800 |
| M403 | Flameproof compliance for Australia per IECEx standards. NOT AVAILABLE TYPES 800, 802, T800 |
| M404 | Flameproof compliance for Ukraine per Gosnadzorohrantruda standards. NOT AVAILABLE TYPES 800, 802, T800 |
| M406 | Flameproof compliance for Russia per Gosgortechnadzor standards. NOT AVAILABLE TYPES 800, 802, T800 |
| M408 | Flameproof compliance for China per CQST standards. NOT AVAILABLE TYPES 800, 802, T800 |
| M444 | Paper ID tag |
| M446 | Stainless steel ID tag & wire attachment |
| M900 | Watertight conduit fitting; converts 7/8" hole to 1/2" NPT fitting. NOT AVAILABLE TYPES 820E, 822E |

* All switch options have limited DC capabilities. Consult factory for details.

# OPTIONS FOR TEMPERATURE MODELS

**UNION CONNECTORS**

| Option | Replacement Number | Description |
|---|---|---|
| | Brass | |
| W027 | SD6213-27 | 1/2" NPT w/ 3/4" bushing |
| W045 | SD6213-45 | 3/4" NPT |
| W051 | SD6213-51 | 1/2" NPT |
| | 304 Stainless Steel | |
| W028 | SD6213-28 | 1/2" NPT w/ 3/4" bushing |
| W046 | SD6213-46 | 3/4" NPT |
| W050 | SD6213-50 | 1/2" NPT |

**THERMOWELLS**

*For all bulb & capillary switches, except Model 13545*

| | | |
|---|---|---|
| | Brass | |
| W075 | SD6225-75 | 1/2" NPT with 3/4" NPT adapter bushing, 4" BT |
| W191 | SD6225-191 | 1/2" NPT, 4" BT |
| W118 | SD6225-118 | 1/2" NPT with 3/4" NPT adapter bushing, 7" BT |
| W192 | SD6225-192 | 1/2" NPT, 7" BT |
| | 316 Stainless Steel | |
| W076 | SD6225-76 | 3/4" NPT, 4.5" BT |
| W193 | SD6225-193 | 1/2" NPT, 4.5" BT |
| W119 | SD6225-119 | 3/4" NPT, 7.5" BT |
| W177 | SD6225-177 | 1/2" NPT, 7.5" BT |

**OPTIONAL LENGTHS:**

Optional capillary length to *50' available in copper or 304 st/st. Armor or Teflon® capillary protection available to lengths less than or equal to capillary length. Consult UE for additional information.

* Consult UE regarding repeatability and ambient effects on capillary lengths over 30'

# DIMENSIONAL DRAWINGS

## 800 Series

### External Set Point Adjustment & Temperature Indication

### Types 800, 802, T800

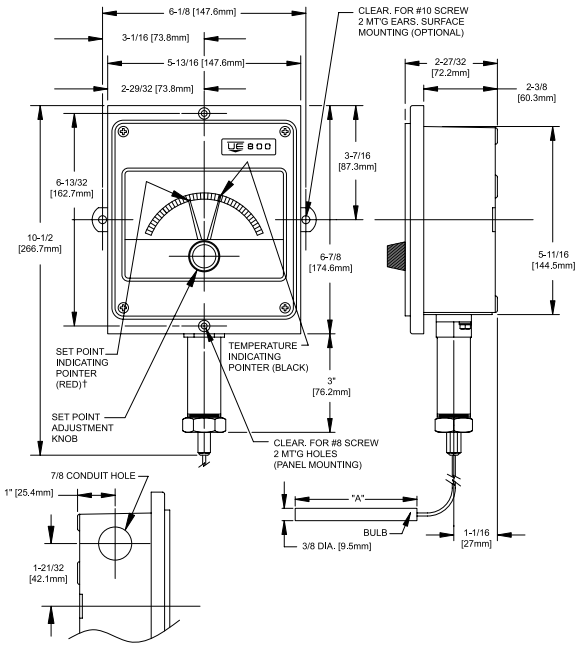


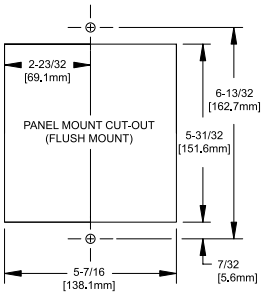


| Dimension A | | |
|---|---|---|
| **Models** | **Inches** | **mm** |
| 1BS | 3-3/4 | 95.3 |
| 2BS | 2-7/16 | 62.0 |
| 3BS | 2-1/8 | 54.0 |
| 4BS | 6-3/4 | 171.5 |
| 5BS | 5 | 127.0 |
| 6BS | 4-1/2 | 114.3 |
| 7BS | 3 | 76.2 |
| 8BS | 3-1/4 | 82.6 |

### Type 820 E

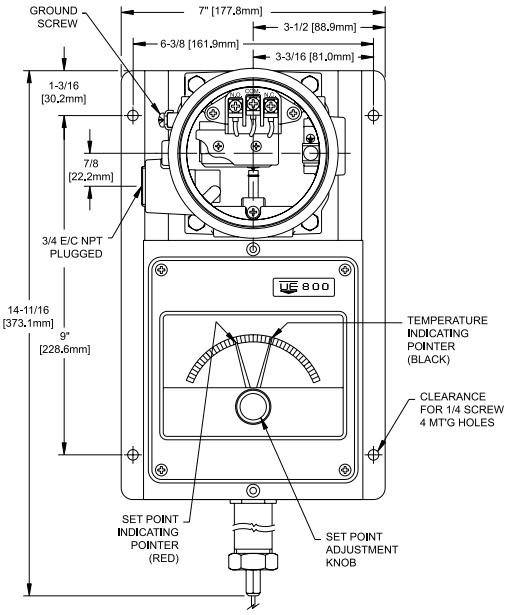


### Type 822 E

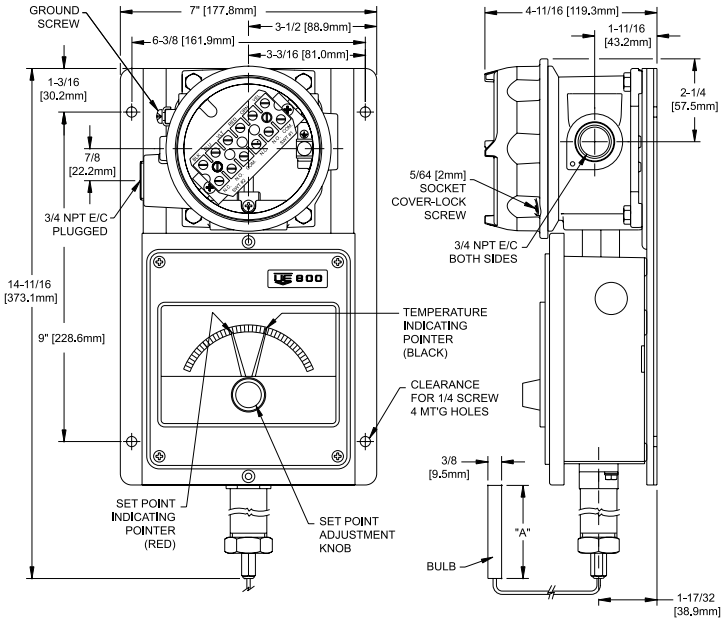


†Type 802 has a second set point indicating pointer (green). Type 800 has no set point indicating pointer.

## RECOMMENDED PRACTICES AND WARNINGS

United Electric Controls Company recommends careful consideration of the following factors when specifying and installing UE pressure and temperature units. Before installing a unit, the Installation and Maintenance instructions provided with unit must be read and understood.

- To avoid damaging unit, proof pressure and maximum temperature limits stated in literature and on nameplates must never be exceeded, even by surges in the system. Operation of the unit up to maximum pressure or temperature is acceptable on a limited basis (e.g., start-up, testing) but continuous operation must be restricted to the designated adjustable range. Excessive cycling at maximum pressure or temperature limits could reduce sensor life.
- A back-up unit is necessary for applications where damage to a primary unit could endanger life, limb or property. A high or low limit switch is necessary for applications where a dangerous runaway condition could result.
- The adjustable range must be selected so that incorrect, inadvertent or malicious setting at any range point cannot result in an unsafe system condition.
- Install unit where shock, vibration and ambient temperature fluctuations will not damage unit or affect operation. When applicable, orient unit so that moisture does not enter the enclosure via the electrical connection. When appropriate, this entry point should be sealed to prevent moisture entry.
- Unit must not be altered or modified after shipment. Consult UE if modification is necessary.
- Monitor operation to observe warning signs of possible damage to unit, such as drift in set point or faulty display. Check unit immediately.
- Preventative maintenance and periodic testing is necessary for critical applications where damage could endanger property or personnel.
- Electrical ratings stated in literature and on nameplate must not be exceeded. Overload on a switch can cause damage, even on the first cycle. Wire unit according to local and national electrical codes, using wire size recommended in installation sheet.
- Do not mount unit in ambient temp. exceeding published limits.

## LIMITED WARRANTY

Seller warrants that the product hereby purchased is, upon delivery, free from defects in material and workmanship and that any such product which is found to be defective in such workmanship or material will be repaired or replaced by Seller (Ex-works, Factory, Watertown, Massachusetts. INCOTERMS); provided, however, that this warranty applies only to equipment found to be so defective within a period of 24 months from the date of manufacture by the Seller. Seller shall not be obligated under this warranty for alleged defects which examination discloses are due to tampering, misuse, neglect, improper storage, and in any case where products are disassembled by anyone other than authorized Seller's representatives. EXCEPT FOR THE LIMITED WARRANTY OF REPAIR AND REPLACEMENT STATED ABOVE, SELLER DISCLAIMS ALL WARRANTIES WHATSOEVER WITH RESPECT TO THE PRODUCT, INCLUDING ALL IMPLIED WARRANTIES OF MERCHANTABILITY OR FITNESS FOR ANY PARTICULAR PURPOSE.

## LIMITATION OF SELLER'S LIABILITY

Seller's liability to Buyer for any loss or claim, including liability incurred in connection with (i) breach of any warranty whatsoever, expressed or implied, (ii) a breach of contract, (iii) a negligent act or acts (or negligent failure to act) committed by Seller, or (iv) an act for which strict liability will be inputted to seller, is limited to the "limited warranty" of repair and/or replacement as so stated in our warranty of product. In no event shall the Seller be liable for any special, indirect, consequential or other damages of a like general nature, including, without limitation, loss of profits or production, or loss or expenses of any nature incurred by the buyer or any third party.

UE specifications subject to change without notice.

## U.S. SALES OFFICES

United Electric Controls
32 Highland Rd.
South Hampton, NH 03827
Phone: 603-394-0078
FAX: 603-394-0175

United Electric Controls
28 N. Wise Ave.
Freeport, IL 61032
Phone: 815-235-3501
FAX: 815-235-3847

United Electric Controls
1022 Vineyard Drive
Conyers, GA 30013
Phone: 770-483-8400
FAX: 770-929-8716

United Electric Controls
5829 Grazing Court
Mason, OH 45040
Phone: 513-398-3175
FAX: 513-398-3076

United Electric Controls
102 Salazar Court
Clayton, CA 94517
Phone: 925-524-0210
FAX: 925-524-0210

United Electric Controls
27 Summit Terrace
Sparta, NJ 07871
Phone: 973-271-2550
FAX: 973-729-6099

United Electric Controls
4306 Whickham Drive
Fulshear, TX 77441
Phone: 832-457-6138
FAX: 832-201-8116

## CANADA

EASTERN
68 Mosley Crescent
Brampton, Ontario
Canada L6Y 5C8
Phone: 905-455-5131
FAX: 905-455-5131

WESTERN
148 Silver Ridge Close N.W.
Calgary, Alberta
Canada T3B 3T4
Phone: 403-247-3724
FAX: 403-247-3724

## INTERNATIONAL OFFICES

BELGIUM
United Electric Controls-Europe
G. Van Gervenstraat 19A
B-9120 Beveren-Waas, Belgium
Phone: 32-37554-383
FAX: 32-37552-747

CHINA
United Electric Controls
Room 1114, No. 511
Shenshi Building
Weihai Road
Shanghai 200041, P.R. China
Phone: +8621-6255 8059
FAX: +8621-6255 8349

EASTERN EUROPE & SCANDINAVIA
United Electric Controls
05-806 Komorow
Kujawska 5, Poland
Phone: +48 22 499 4804
FAX: +48 22 499 4803

GERMANY
United Electric Controls
An Der Zentlinde 21
D-64711 Erbach, Germany
Phone: 496-062-7400
FAX: 496-062-7501

MALAYSIA
United Electric Controls, Far East
No. 1-2-2, 2nd Floor
Jalan 4/101C
Cheras Business Centre
Batu 5, Jalan Cheras
56100 Kuala Lumpur, Malaysia
Phone: 603-9133-4122
FAX: 603-9133-4155

MEXICO
United Electric Controls
Andador Austria 102
Fracc. Petroquimica CP 89365
Tampico, Tamaulipas Mexico
Phone: 833-132-3726
FAX: 833-132-3726

RUSSIA
United Electric Controls, Moscow
Kuusinena str., 19A, Office 310
Moscow, 125252, Russia
Phone: +7 (095) 792-88-06
FAX: +7 (095) 258-92-12

UNITED ELECTRIC CONTROLS

180 Dexter Avenue, P.O. Box 9143
Watertown, MA 02471-9143 USA
Telephone: 617 926-1000 Fax: 617 926-2568
http://www.ueonline.com